PORCELAIN DECKING

EXADECK

INSTALLATION GUIDE

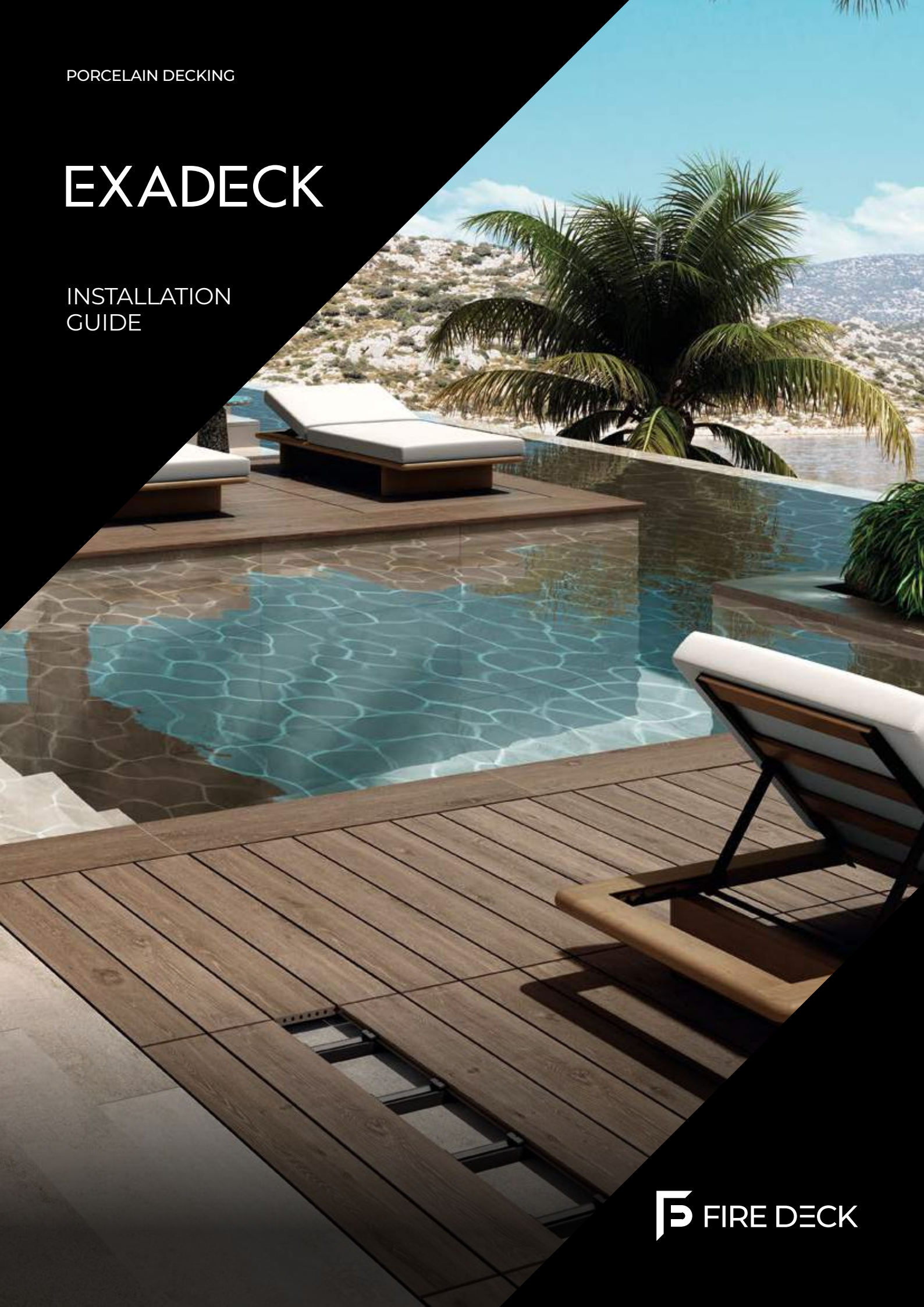

FIRE DECK

BENEFITS

FIRE DECK is proud to introduce EXADECK, the flagship product for all commercial and residential balconies, roof terraces. Unique in the market, this innovative porcelain decking specifically designed for Highrise buildings looking for an A1 non-combustible product that not only is more durable than aluminium and cement fibre board decking but also gives you the most luxurious look.

EXADECK has revolutionised the construction sector and become the best alternative to conventional decking thanks to its extreme resistance to wind, fire and stains, as well as the durability of the material itself and its strong non-slip properties and has an exquisite design inspired by natural timber.

BENEFITS OF EXADECK PORCELAIN DECKING

- HARDWEARING – EXADECK porcelain decking has a hardness close to diamond and is almost impossible to scratch.
- STAIN RESISTANT – during the manufacturing process EXADECK porcelain decking is vitrified so that it does not absorb any water.
- FROST PROOF – Thanks to the vitrification process, EXADECK porcelain decking is totally frost proof.
- 100% COLOURFAST – unlike wood, composite, cement fibre board and aluminium decking, EXADECK porcelain decking will be the same colour in 1000 years' time without having to re-apply paint or sealers like other non-combustible products on the market. EXADECK is perfect for coastal/marine environments where salts might affect the surface /colour due to salts.
- RESISTANT TO HEAT – EXADECK porcelain decking does not shrink or swell when exposed to heat or changes in humidity, unlike wood and composite when installed.
- LONG-LASTING & ENVIRONMENTALLY FRIENDLY – EXADECK porcelain decking when installed will look as good in fifty years as when it was first laid whereas other boards will fade and need replacing.
- SAFE – EXADECK porcelain decking does not contain any nasty chemicals and are inert to most chemical reactions. This is not the case with wood decking, composite decking, cement fibre decking and aluminium decking.
- SUITABLE FOR USE OUTSIDE – EXADECK porcelain decking has been designed to be used inside and outside, allowing you to create a seamless link between your living spaces where you must compromise with other non-combustible products because they cannot be used inside.



ADVANTAGES

FIRE-RESISTANT: CLASS A1
Porcelain tile materials are fully fire resistant. Porcelain tiles are one of the few materials that do not burn, melt or release substances that are harmful for people or the environment, even in direct contact with flames.

WIND RESISTANT
In outdoor environments, EXADECK is a wind-resistant decking system. It can withstand both positive pressure (uplift) and negative pressure (suction).

A SCREW-FREE INSTALLATION SYSTEM
EXADECK is perfect for use on flat roofs and balconies, because the battens can be anchored with composite materials rather than screwing them down. This avoids possible water leaks.

THE ONLY Porcelain DECKING ON THE MARKET
EXADECK is an porcelain decking system. In comparison with wood or synthetic materials, it affords all kinds of advantages in terms of its installation and useful life. Additionally, only minimal care is required.

ANTI-BACTERIAL
Hygiene and safety are two key priorities in today's society. Because EXADECK is made of porcelain materials, it offers a series of advantages over other rival products. These include an easy-to-clean surface, anti-bacterial properties and almost zero water absorption.

STAIN RESISTANT & MAINTENANCE FREE
Thanks to its high resistance to stains, EXADECK is an easy-to-clean outdoor solution. It is also perfect for renovating patios and terraces, without having to worry about its maintenance, since it does not require treatments, and is resistant to sun and rain.

HIGH MECHANICAL & ABRASION RESISTANCE
A product with a very high breaking strength and outstanding resistance to surface abrasion.

DURABILITY & RESISTANCE
TO ULTRA-VIOLET RAYS
EXADECK is made of top-quality porcelain tile material, guaranteeing a high breaking strength and resistance to ultra-violet rays. These properties make EXADECK unalterable over time.

COMMITTED TO THE ENVIRONMENT
In the faithful commitment of EXADECK with the environment, the EXADECK system is designed to be disassembled, which facilitates the separation of its components to be recycled. The pieces are composed of virgin raw materials and recycled porcelains, favoring waste prevention. In addition, EXADECK offers itself as a collection point for EXADECK boards to give them a new life.

CLASS 3-R11 /C ANTI-SLIP PROPERTIES
Porcelain tile material with a high anti-slip grip. Rated CLASS 3 - R11/C.

RESISTANCE TO FROST, ICE
& TEMPERATURE CHANGES
It can also withstand sharp temperature changes: it does not become deformed and neither do the boards expand.

SUITABLE FOR RESIDENTIAL
OR COMMERCIAL AREAS (HIGH TRAFFIC)
EXADECK decking is suitable for use in areas subject to high pedestrian traffic, thanks to its high abrasion resistance and outstanding technical properties.

REMOVABLE SYSTEM
EXADECK parts are installed using a customized clip system. This results in a fast and agile installation, thus greatly reducing the execution time of the work.

ACCESSORIES
The wide range of EXADECK products offers the possibility of combining EXADECK boards with other elements that solve different technical aspects: steps and copings for skimmer system pools.

LAYOUTS

EXADECK can be laid in different patterns to create varying layouts. The boards can be laid linearly so that their vertical and horizontal joints coincide or in staggered, with a 50% offset so that the short end of each board is aligned with the middle of the adjacent one. EXADECK boards should never be supported by fewer than 4 battens.

LINEAR LAYOUT

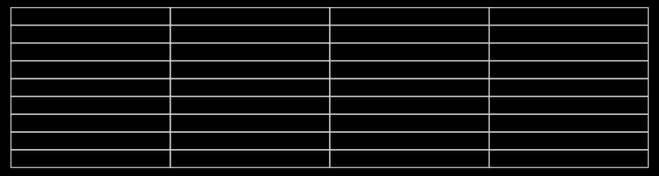

STAGGERED LAYOUT

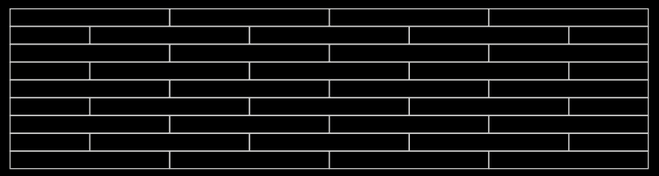

Boards per m^2 (including tile joint) = 5.55 full boards.

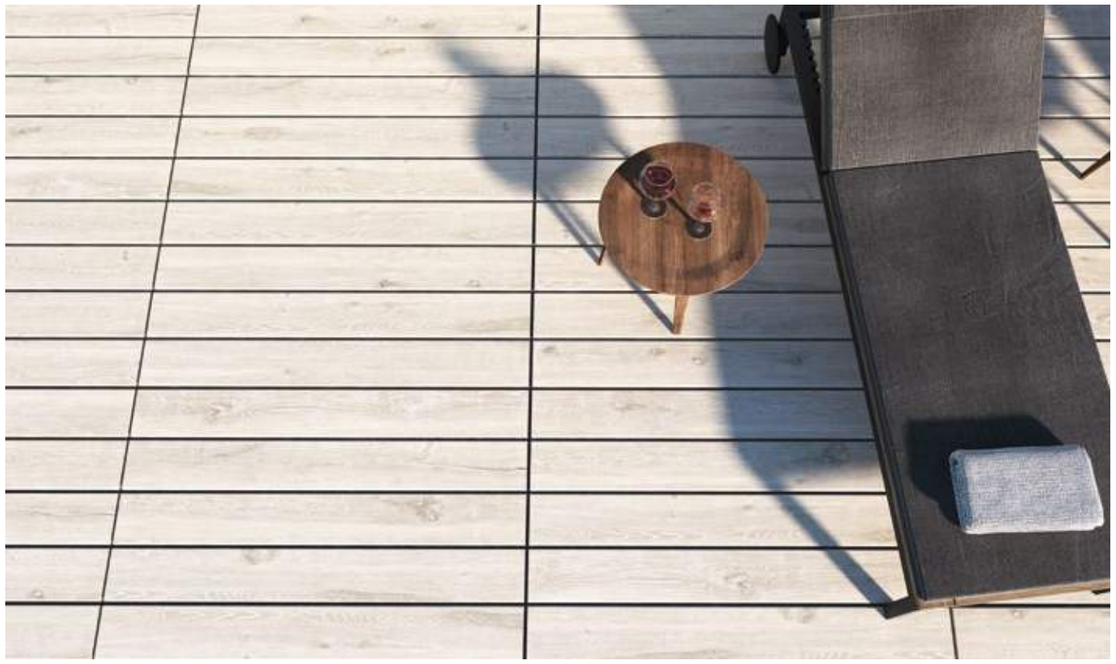

Linear Layout

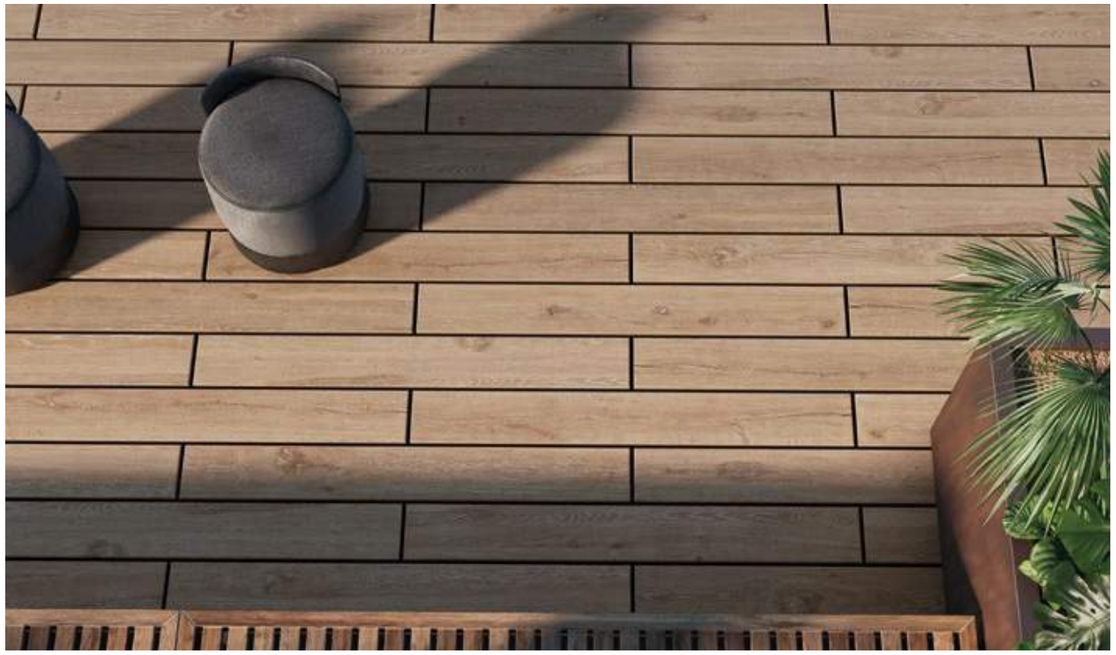

Staggered Layout

PROJECT: THE DUMONT - ALBERT EMBANKMENT LOCATION: LONDON, UK MATERIAL: EXADECK GREY





PROJECT: THE DUMONT - ALBERT EMBANKMENT LOCATION: LONDON, UK MATERIAL: EXADECK GREY



PROJECT: PRIVATE HOUSE · LOCATION: BARCELONA · MATERIAL: EXADECK OAK





PROJECT: PRIVATE HOUSE POOL · LOCATION: ZARAGOZA · MATERIAL: EXADECK ANTICO





PRIVATE HOUSE POOL · ZARAGOZA · EXADECK OAK



AREA VERDA · BARCELONA · EXADECK GREY



PRIVATE HOUSE POOL · BURGO DE EBRO · EXADECK MAPLE





PRIVATE HOUSE POOL · BARCELONA · EXADECK GREY



DIAGONAL · BARCELONA · EXADECK ANTICO

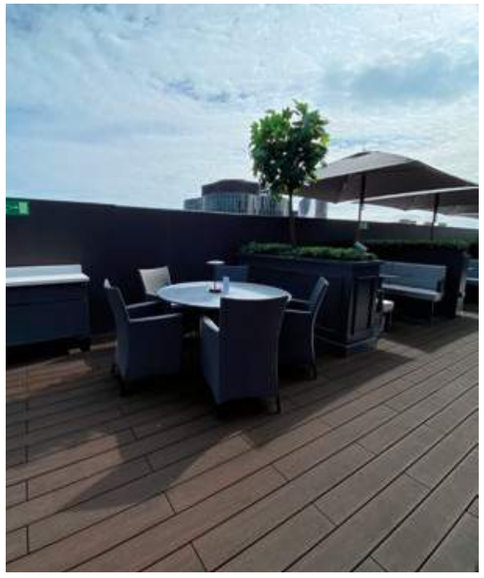

PRIVATE HOUSE POOL · LOMBARDIA · EXADECK ANTICO

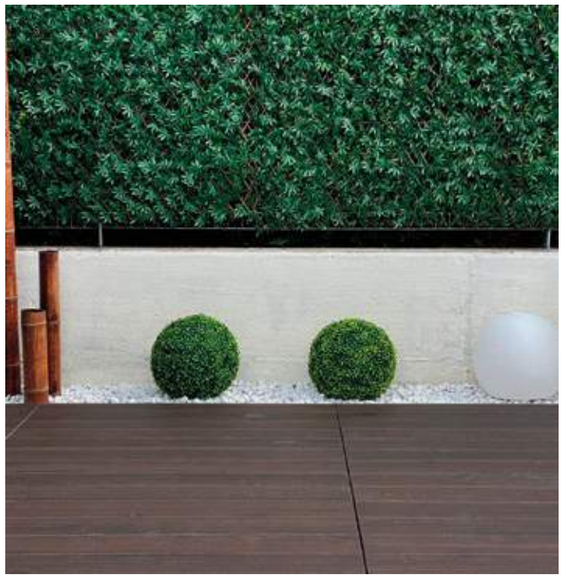



These are the basic components of the Exadeck system for assembly on a previously prepared, resistant substrate.

ALUMINIUM TRACKER



2200 x 35 x 25 mm

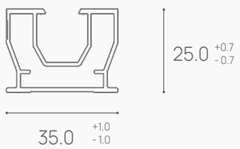

RASTREL ALUMINIUM PRO



2200 x 40 x 40 mm

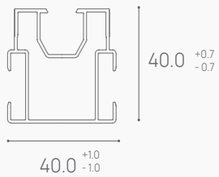

*Used for raised floors.

CLIP PRO



40 x 20 x 20 mm

START/END CLIP PRO



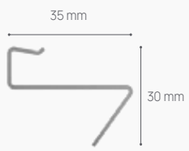

35 x 15 x 30 mm

ADHESIVE TAPE



Width 1 cm (roll 20 m)

EXADECK PARTS INSTALLATION DIAGRAM

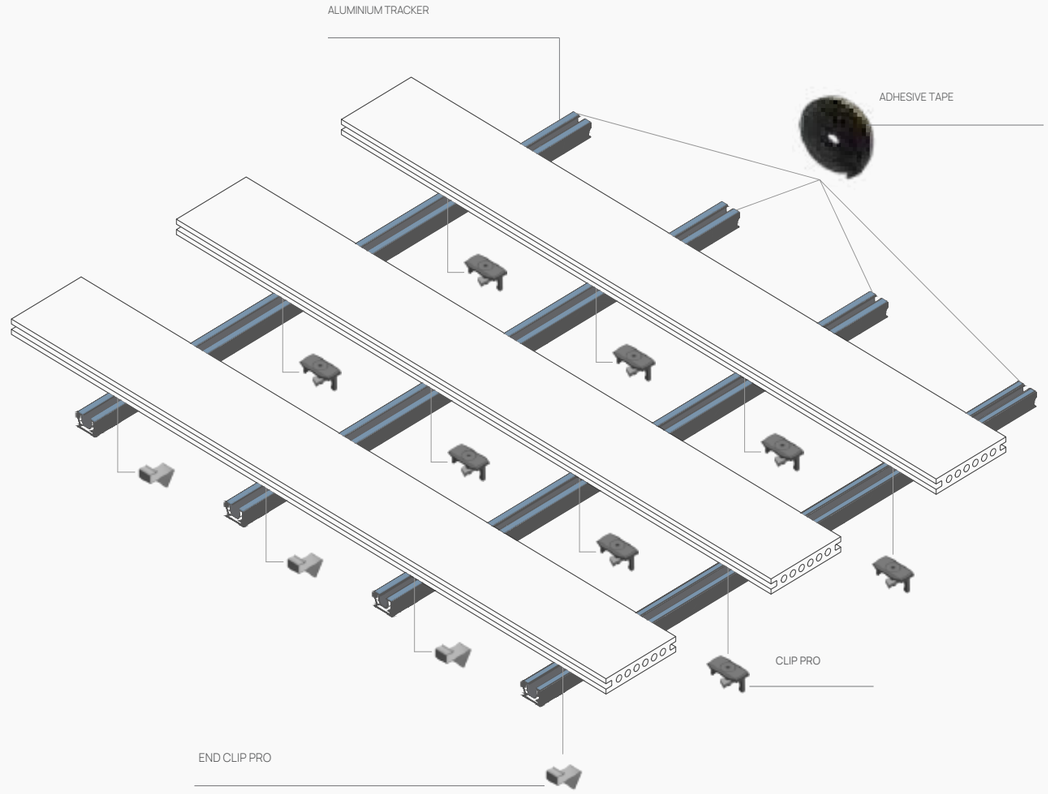

EXADECK

GENERAL INSTALLATION GUIDELINES

Aluminium battens should always be supported on a solid surface along their entire length, except in the case of raised constructions where the special PRO aluminium battens should be used.
They should be laid in such a way that there is no build-up of water and it can drain away.
The Exadeck range is designed solely for areas with pedestrian traffic.
It is recommended to install the PRO clips manually using a TORX T20 screwdriver, avoiding the use of electrical machinery.
For installation requirements not contemplated in this manual, please contact Exagres for relevant guidelines.

PREPARING THE SUBSTRATE

The substrate for the decking must be completely stable, with a slope of at least 5mm per linear metre (0.5%) in the direction of the battens for water to drain away.

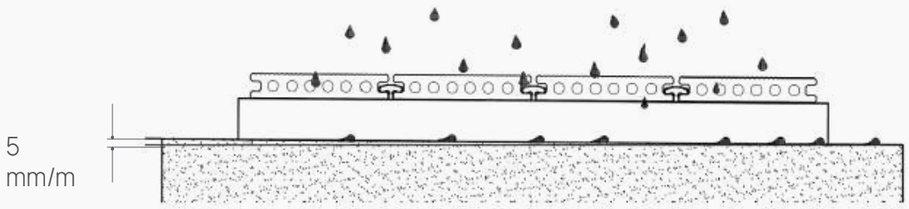

PLANNING THE LAYOUT OF THE BATTENS

Exadeck boards should never be supported by fewer than four battens.

LINEAR LAYOUT

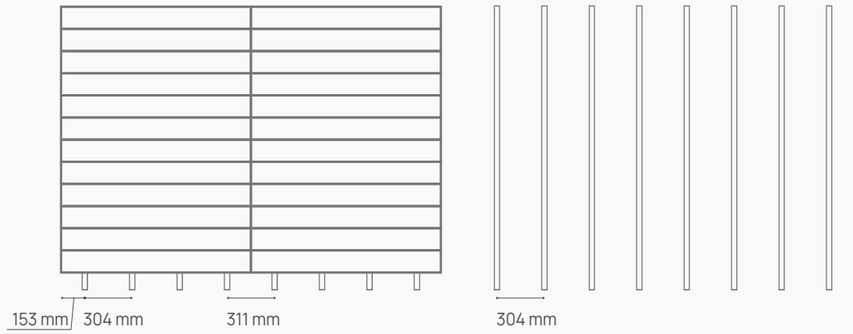

STAGGERED LAYOUT

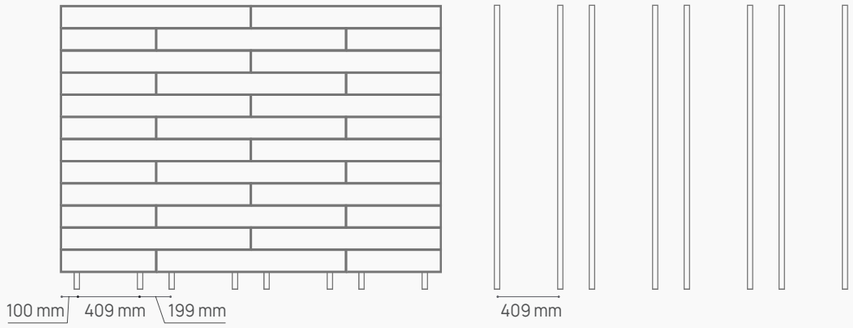

TOTAL SYSTEM HEIGHT

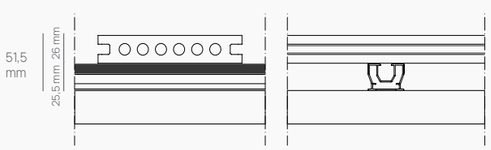

System with aluminium battens

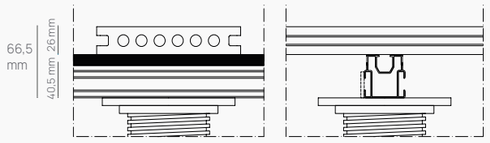

System with aluminium battens on plots

PERIMETER DISTANCES

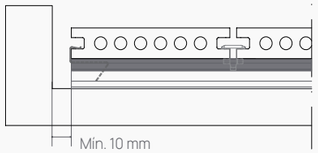

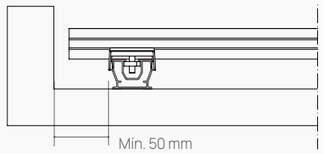

FIX THE BATTENS TO THE SUPPORT

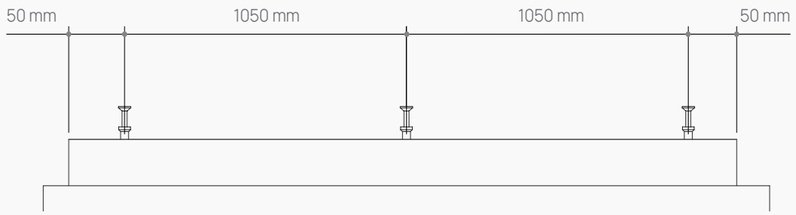



FIXING THE EXADECK BOARDS IN PLACE

1. Gluing of the shock absorbing tape on the battens.

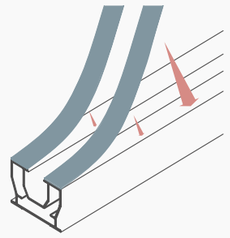

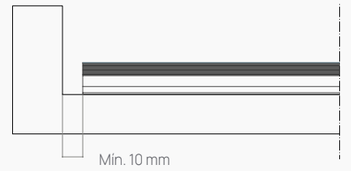

2. Fitting the boards

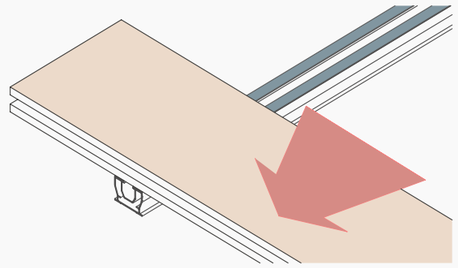

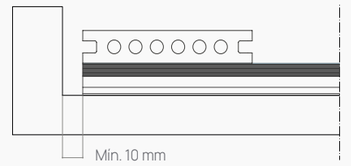

3. Fitting of the start/end clip.

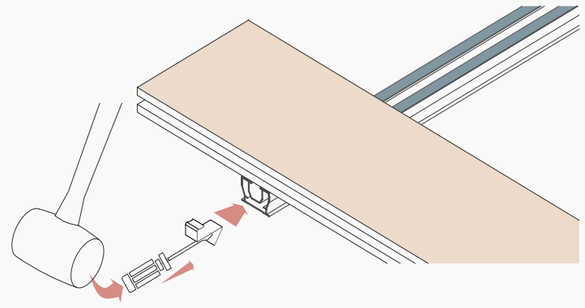

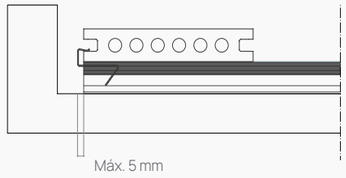

4. Fixing Clip Pro

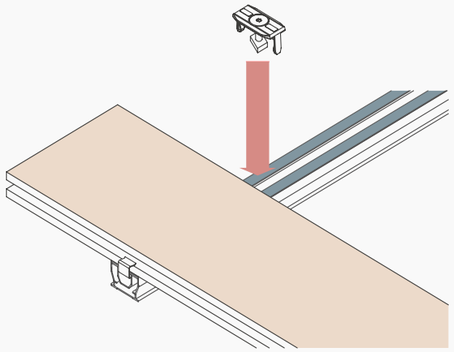

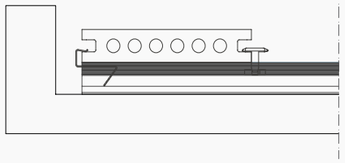

5. Placement of the next ceramic part and fixing of the Clip Pro.

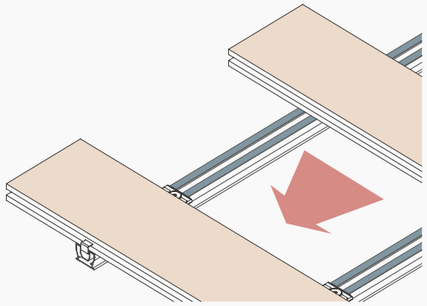

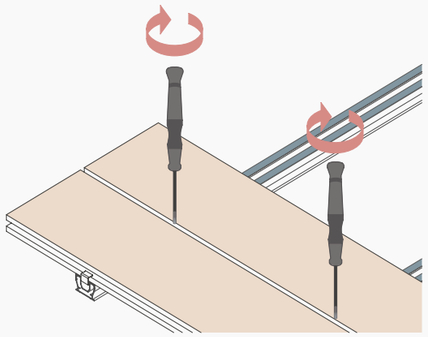

Joint between the boards.

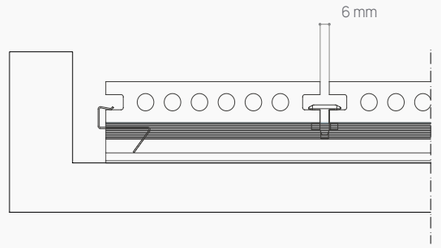

The support or the substructure itself may involve movement. The joint must be open, as the system is designed for water drainage through the joint. The support or the substructure of the system itself could involve movement or expansion, so a minimum joint of 2 mm* should always be taken into account; from this point on, you can play with a joint width other than standard 6.5 mm.

*The climatic zone of the project must be taken into account and the joint must be sized for correct water drainage.

INSTALLATION OF THE CLOSING PIECE

Clip type. Closing piece section.

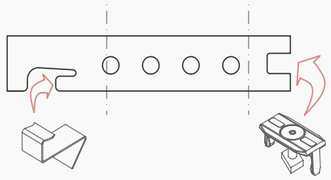

CLIP INICIO/FIN PRO

CLIP PRO

Installation process: Introduction Start/End Clip.

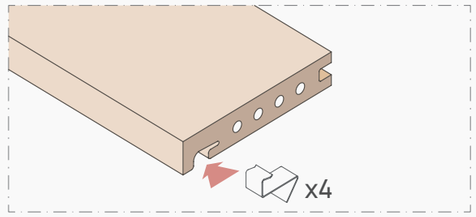

Introducción por el lateral de los 4 clips Inicio/Fin. Introduction from the side of the 4 clips Start/End. Introduction du côté des 4 clips Start/End. Введение со стороны 4 клипов Start/End.

Installation process: introduction Start/End Clip.

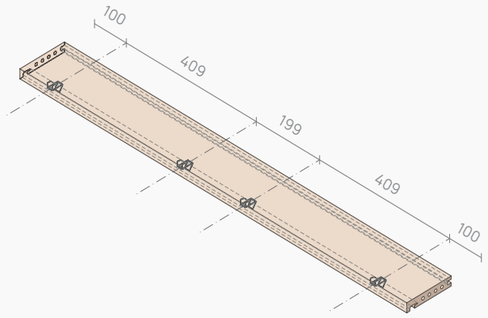

STAGGERED LAYOUT

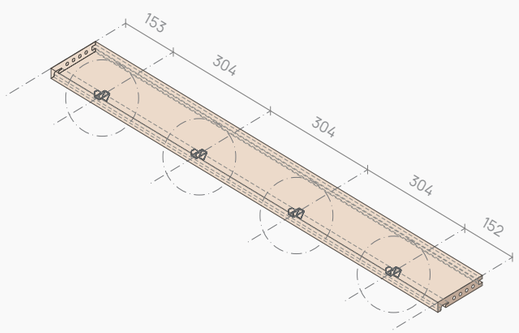

LINEAR LAYOUT

INSTALLATION PROCESS: LAYING CERAMIC SLATS ON BATTENS

1. Pre-installation of the START/END clips in the rear groove of the ceramic slats

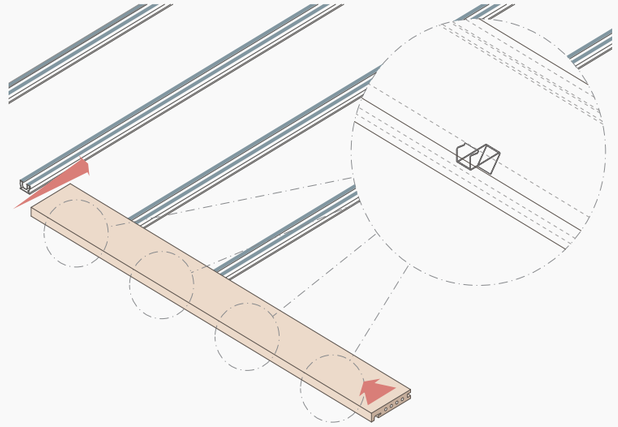

2. Place the ceramic slat by means of the pre-installed START/END clips in the rear groove, using the rubber mallet and the lat-blade screwdriver, and fasten it to the slat at all four ends of the battens.

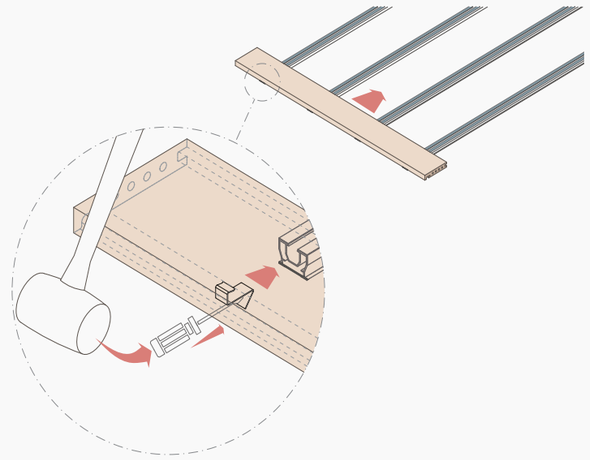

3. Screw the CLIPS PRO through the joint using the TORX tool

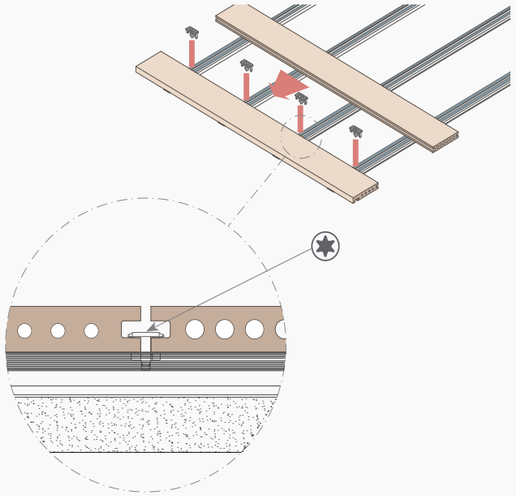

4. Final Result

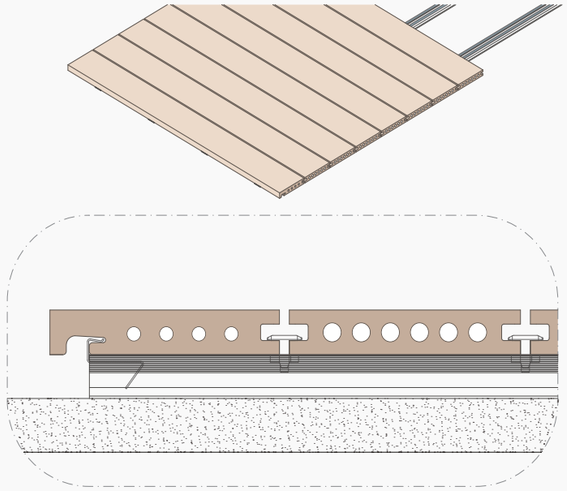

INSTALLATION OF THE CLOSING PIECE: CORNER SOLUTION

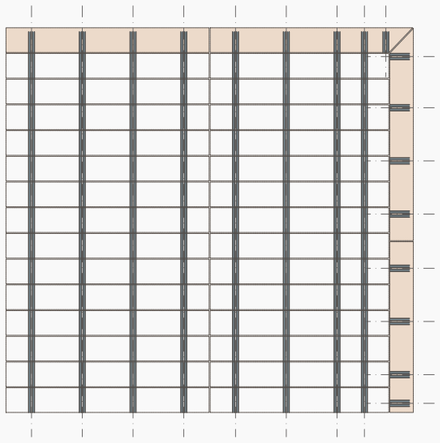

ALIGNED MOUNTING. Plan diagram

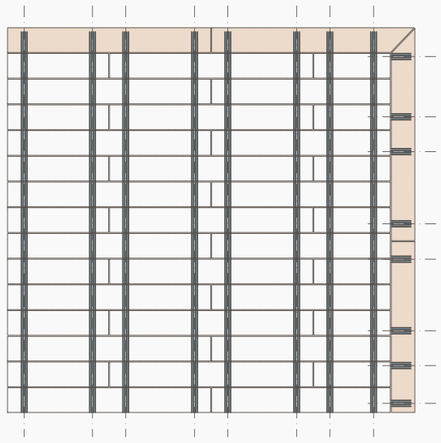

LOCKED MOUNTING. Plan diagram

INSTALLATION OF THE CLOSING PIECE : AGAINST WALL

1. Placement of the board with CLIP START/FIN by removing the component assembly from the wall

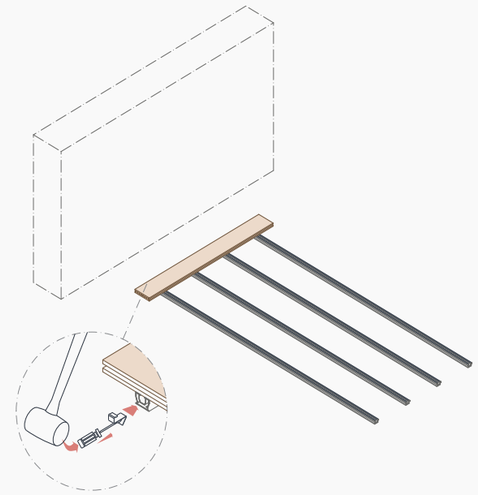

2. Approximate the set of components to the wall

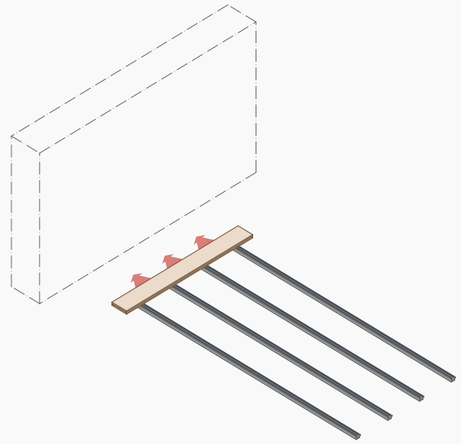

3. Leave a 10 mm gap between the wall and the Exadeck system

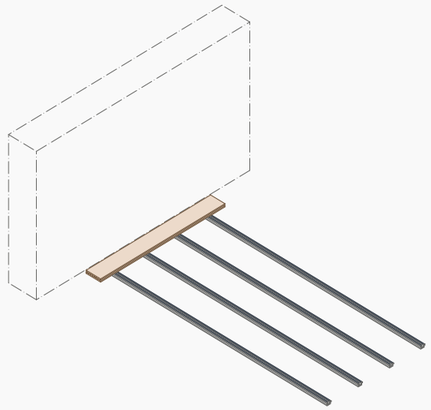

4. Laying of the rest of Exadeck ceramic boards

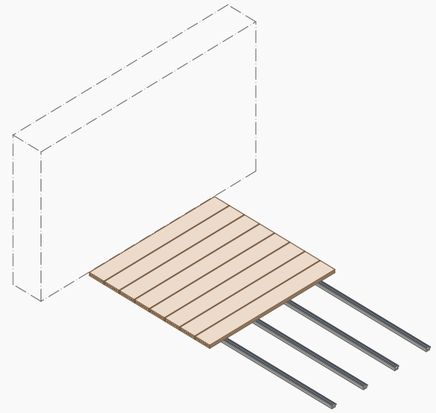

REPLACEMENT OF PIECES

1. Slat to be replaced

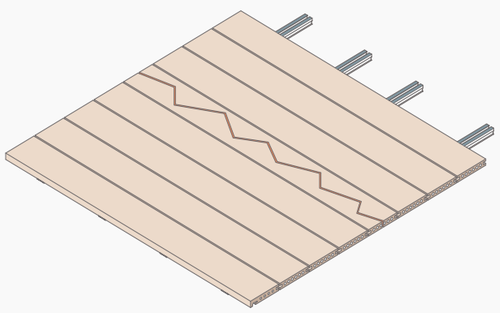

2. Unclipping CLIPS PRO

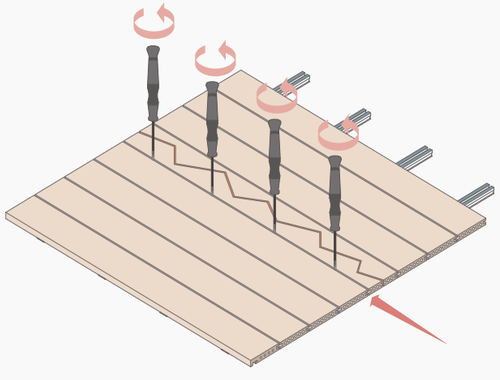

2. Unclipping CLIPS PRO

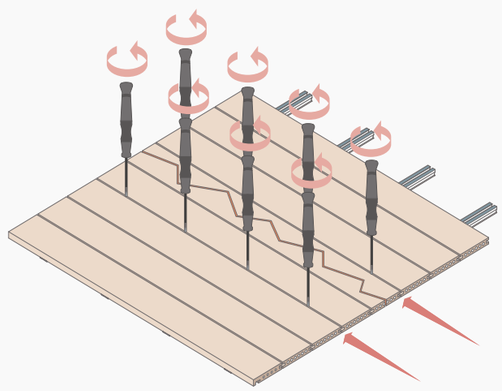

3. Remove slat to be replaced

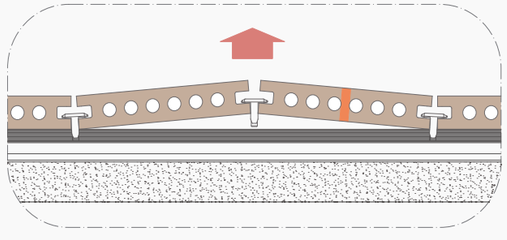

Lift the slats from the joint between the two slats using a T or L shaped tool, e.g. an Allen key.

4. Remove CLIPS PRO

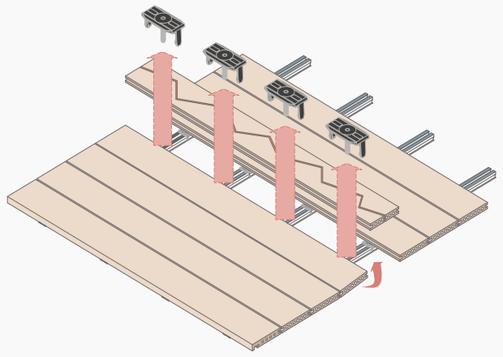

Only remove the PRO clips between the slat to be replaced and the one next to it.
Note that the base of the clip will remain inside the batten when loosening its thread.

5. Retirar bases CLIPS PRO ·
Remove CLIPS PRO bases · Retirer les bases CLIPS PRO · Удалите основания CLIPS PRO

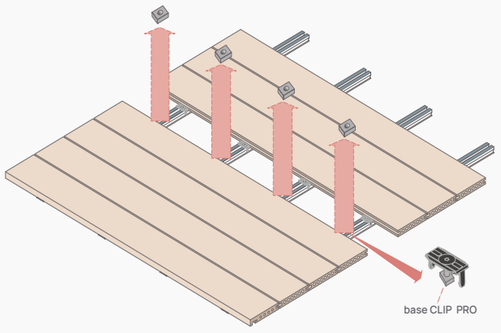

6. Mount base on CLIPS PRO + New slat

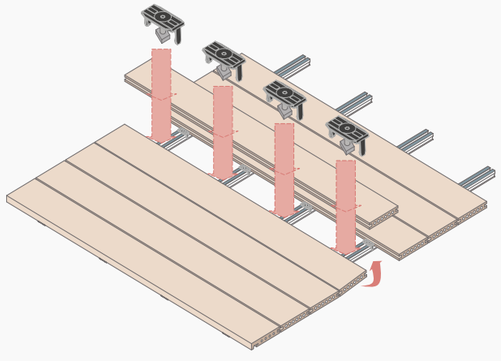

7. Montar CLIPS PRO en nueva lama ·
Mounting CLIPS PRO on new slats · Montage des CLIPS PRO sur les nouvelles lamelles · Монтаж CLIPS PRO на новые рейки

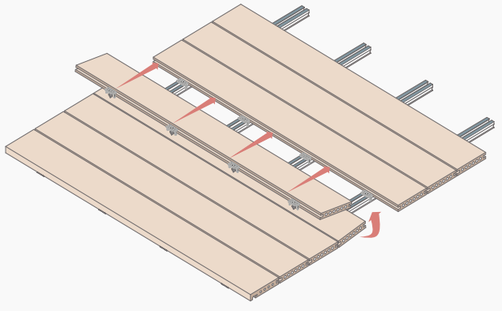

8. Detail of installation of CLIPS PRO in the new slat

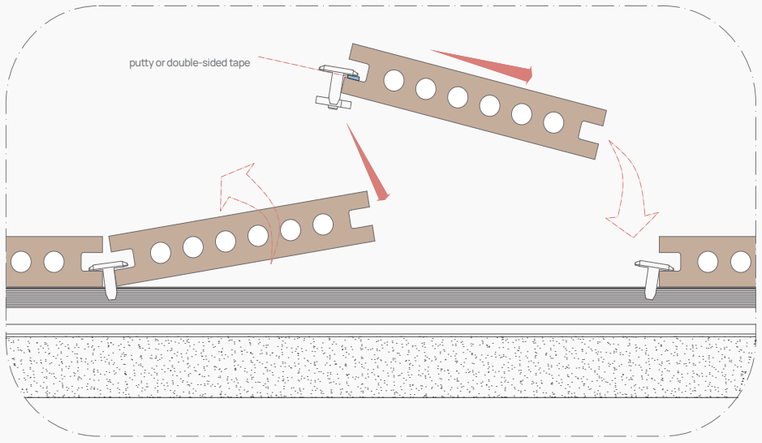

Temporarily f ix the CLIPS PRO to the slat using putty or double-sided tape to aid installation and prevent them f rom coming loose during installation монтажа.

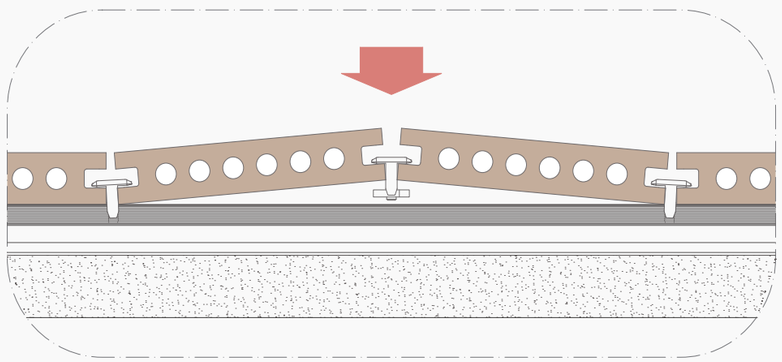

Detail of new slat assembly

9. Adjust CLIPS PRO

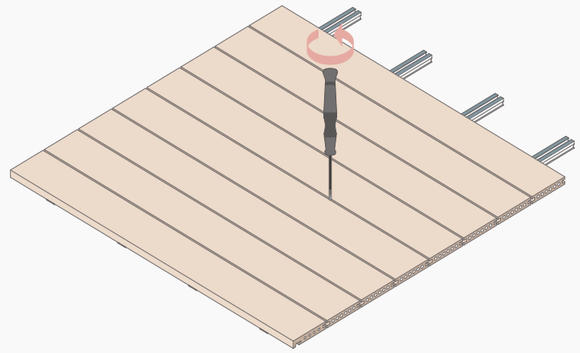

10. Final result

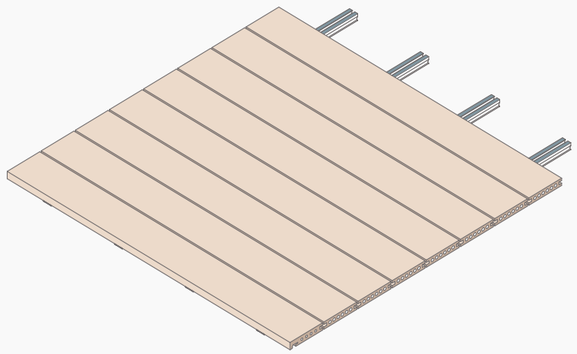

INSTALLATION ON PEDESTALS

- The system should be mounted on a solid substrate with a uniform consistency in outdoor areas solely used for pedestrian traffic, such as terraces, flat rooftops, patios, gardens and poolsides. Exadeck is a good way of overcoming the problem of uneven terrain or rooftops with a slope since it allows for the creation of totally flat surfaces.
- The pedestals should be positioned at a lengthwise distance of 500 mm from one another, measured from the centre of each pedestal, so that there is a maximum distance of 500 mm between the battens.
- Aluminium pro battens must be used for raised-access decking mounted on pedestals.
- The battens should be bonded to the pedestals with polyurethane adhesive. Alternatively, if the pedestals have a batten head, the battens should be screwed laterally to it with a self-drilling metal screw.
- The longitudinal joints should be 6 mm wide, defined by the Quick Fix assembly clip pro.
- The transversal joints should have a recommended width of between 2 mm and 6 mm.



1 Installation on pedestals with boards in staggered layouts.

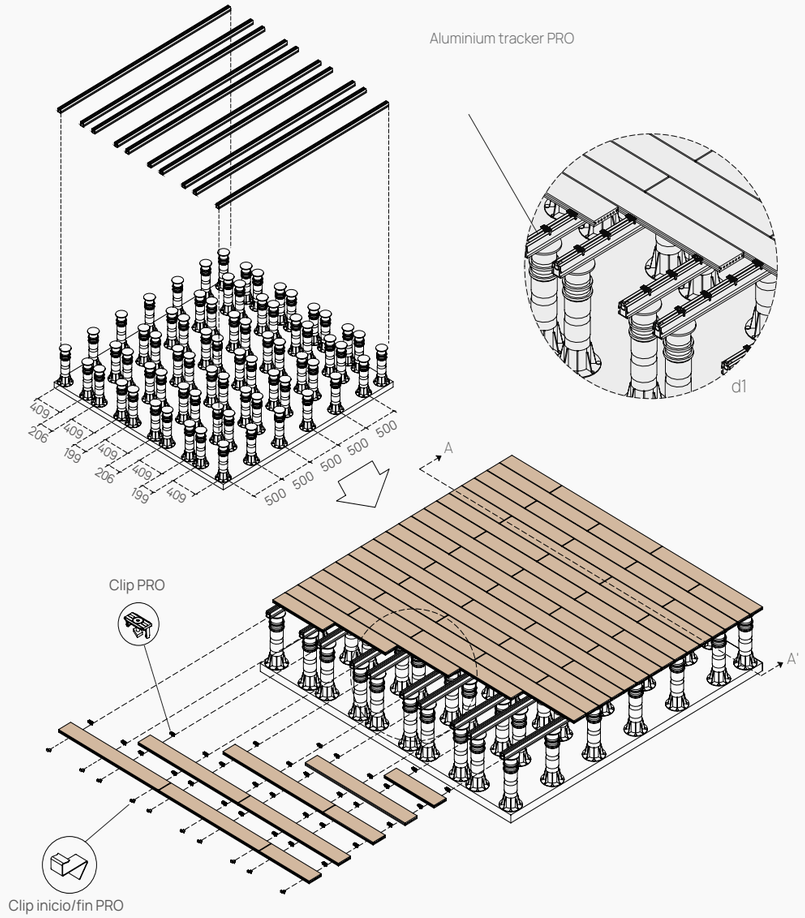

- There should be a maximum distance of 500 mm between the battens.
- The support of the Exadeck ceramic slat on the battens must be a maximum of 409 millimetres.

EXADECK

2 Installation on pedestals with boards in linear layouts.

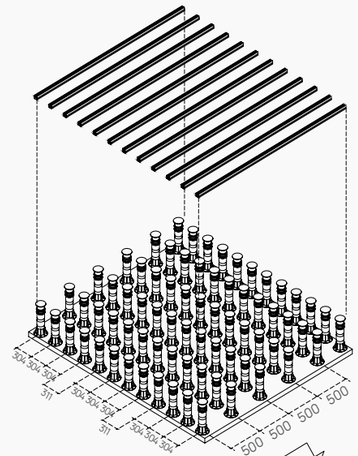

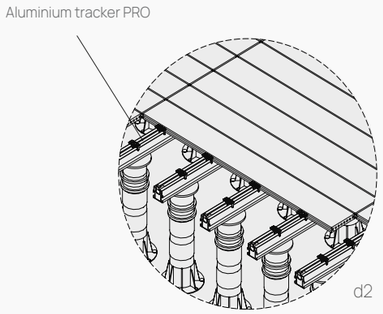

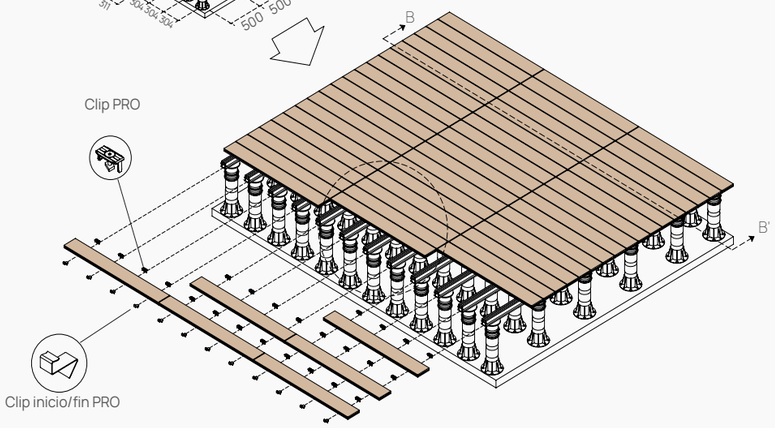

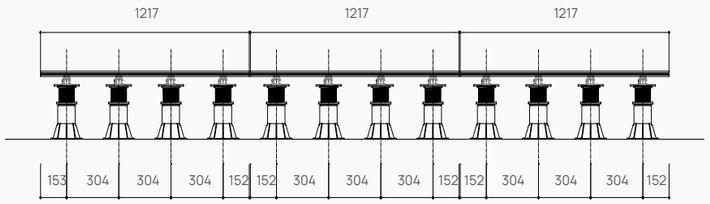

- There should be a maximum distance of 500 mm between the battens.
- The support of the Exadeck ceramic slat on the battens must be a maximum of 304 millimetres.

3 Installation on pedestals with boards in staggered layouts, leaving a wider gap between the pedestals.

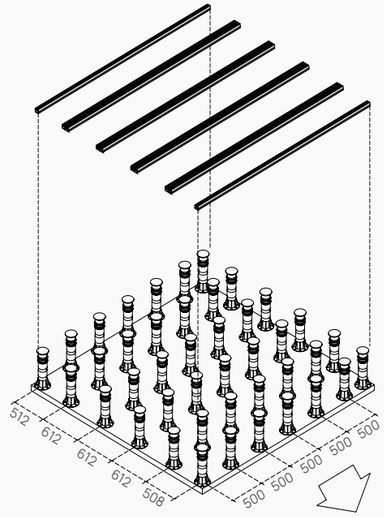

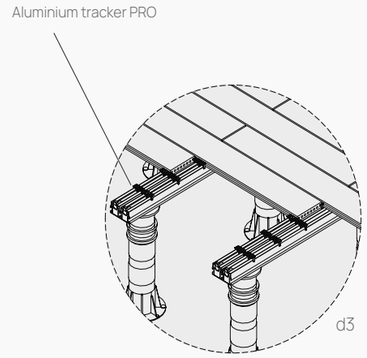

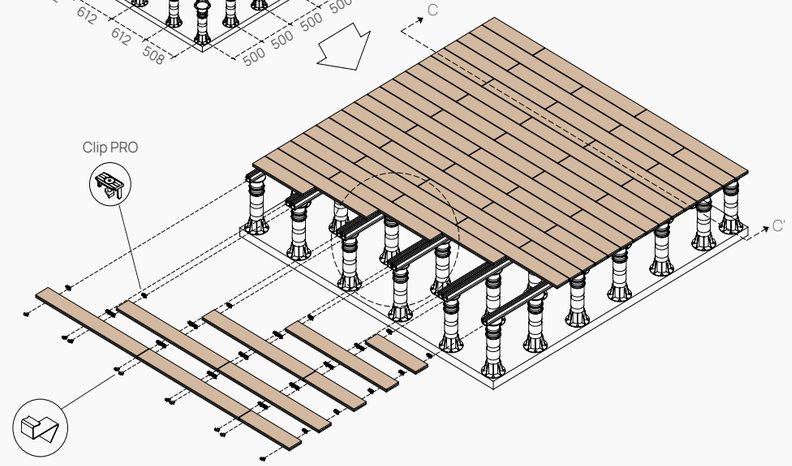

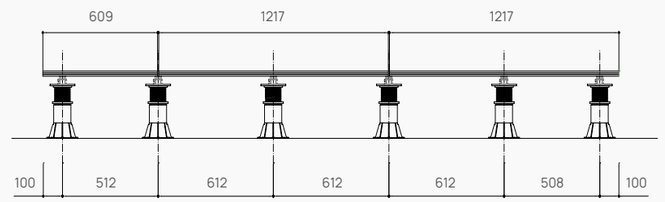

- There should be a maximum distance of 500 mm between the battens.
- The support of the Exadeck ceramic slat on the battens must be a maximum of 615 millimetres.

INSTALLATION ON WOODEN STRUCTURES

Exadeck can also be laid on newly built or existing wooden structures. The decking can either be laid almost at ground level or else raised on pillars to fit in with existing architecture. With this type of installation system, a set of wooden pillars must be firmly rested on the substrate. The pillars support a system of wooden guiderails on which the Exadeck boards are then laid.



1 INSTALLATION OVER EXISTING TIMBER FRAME STRUCTURE

EXISTING DECK SUBFLOOR STRUCTURE

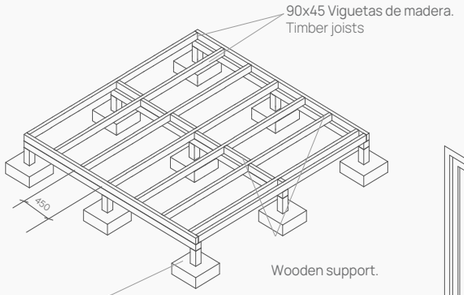

PRO EXADECK BATTENS LAYOUT

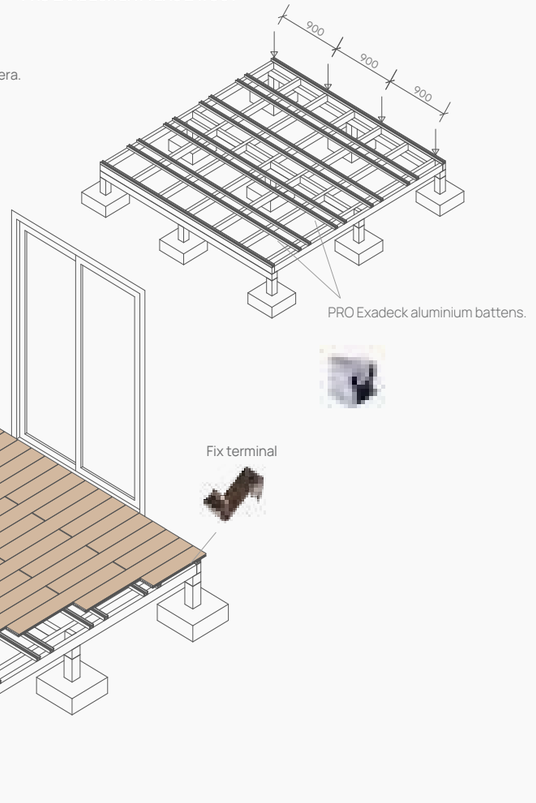

PRO EXADECK BATTENS LAYOUT

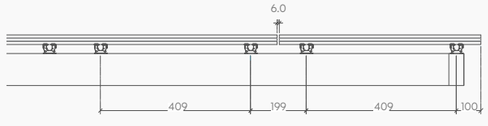

PUNTOS A CONSIDERAR. POINTS TO CONSIDER:

· In the event that the arrangement of these does not allow correct placement according to Exadeck system criteria, Exadeck aluminum battens will be used, which must be installed perpendicular to the existing timber joists.

2 ADAPT/MODIFY EXISTING TIMBER FRAME STRUCTURE FOR EXADECK BOARDS

EXISTING DECK SUBFLOOR STRUCTURE

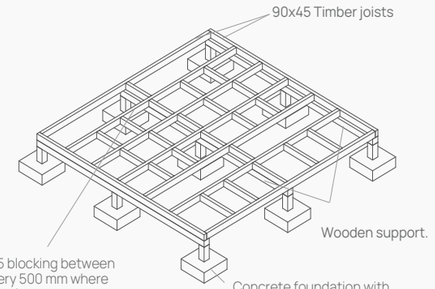

PRO EXADECK BATTENS LAYOUT

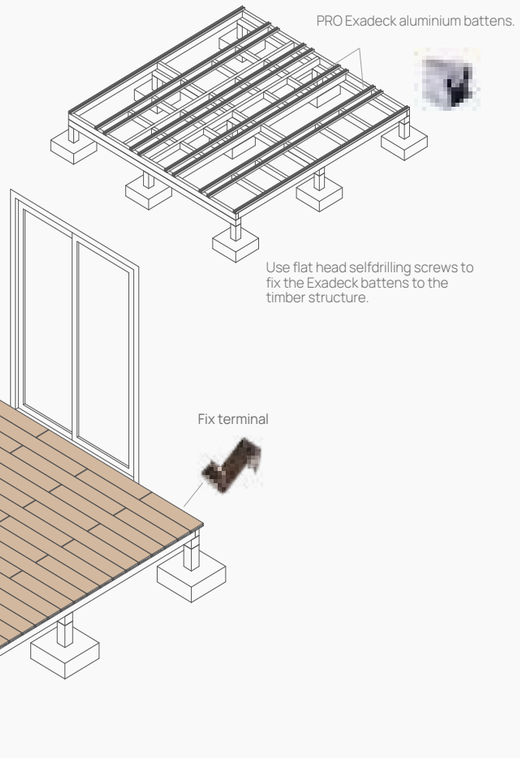

PRO EXADECK BATTENS LAYOUT

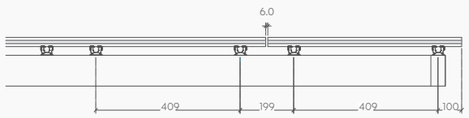

POINTS TO CONSIDER:

· Use Exadeck aluminium battens. when they are placed all along over existing timber joists. If this is not possible, use PRO Exadeck Aluminium battens with a maximum 500mm gap between supports.

· Use selfdrilling screws with flat head to fix battens to the timber structure.

· Maintain the required distances between Exadeck battens to allow a correct installation of the ceramic boards (409 mm and 100 mm).

3 CREATE NEW TIMBER FRAME STRUCTURE FOR EXADECK BOARDS

NEW DECK SUBFLOOR STRUCTURE

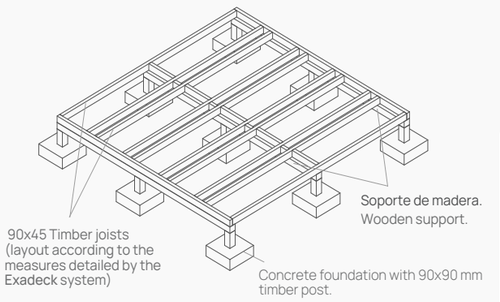

EXADECK BATTENS LAYOUT

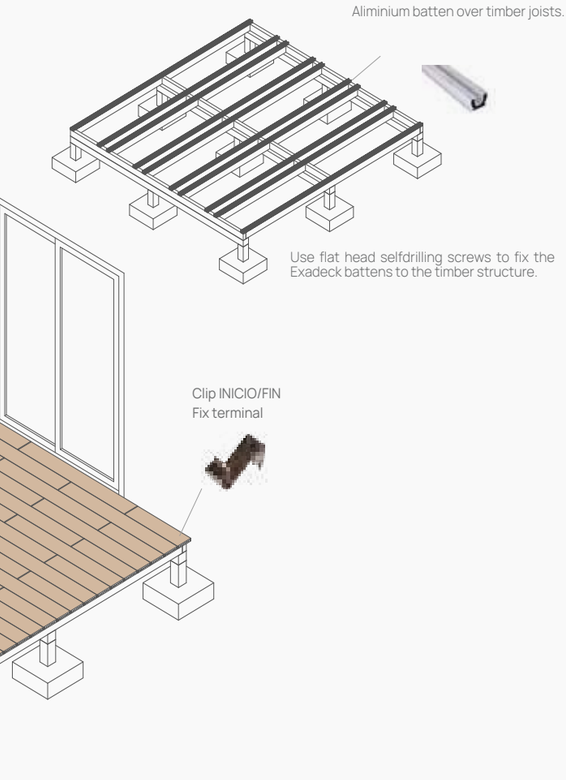

TIMBER JOIST AND ALUMINIUM BATTENS LAYOUT

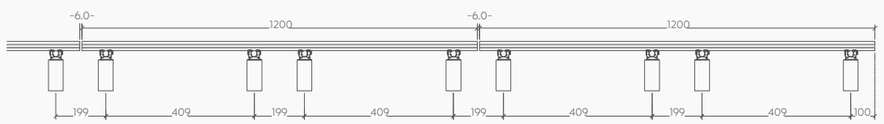

POINTS TO CONSIDER:

· Create the new timber structure to fit the Exadeck installation required distance between battens.

· Exadeck aluminium battens must be placed all along over timber joist.

· Use selfdrilling screws with flat head to fix battens to the timber subfloor structure.

· Maintain the required distances between Exadeck battens to allow a correct installation of the ceramic boards (409 mm and 100 mm).

1 ON REINFORCED CONCRETE STAIRS, USING 120 EXAGRES STEP TILES

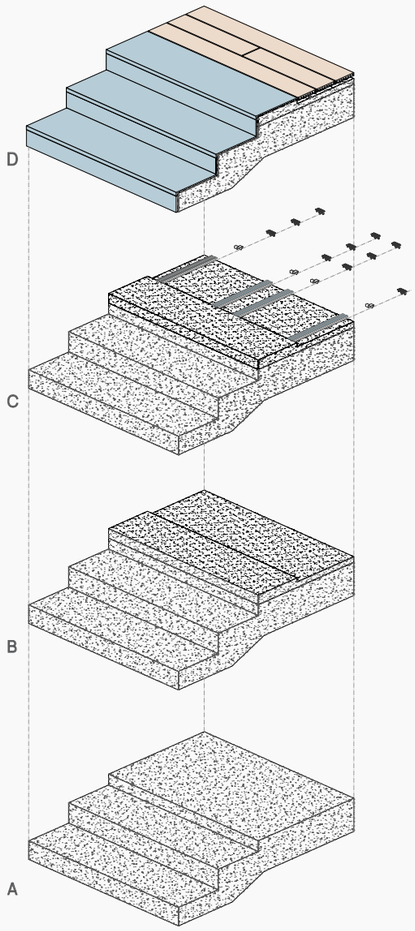

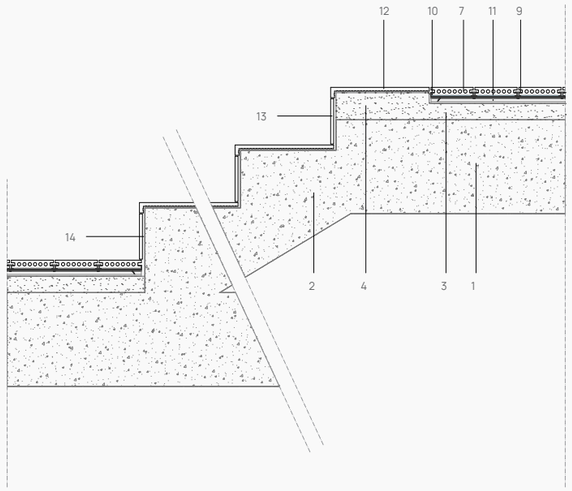

A. ESCALERA HORMIGÓN ARMADO · REINFORCED CONCRETE STAIRS · ESCALIER BÉTON ARMÉ · ЖЕЛЕЗОБЕТОННАЯ ЛЕСТНИЦА.

B. RECRECIDO Y FORMACIÓN DE PENDIENTES · SCREED AND FORMATION OF SLOPES · CHAPE ET FORMATION DE PENTES · ФФОРМИРОВАНИЕ СКЛОНОВ

C. RASTRELES DE ALUMINIO Y CLIPS PRO E INICIO/FIN · ALUMINIUM BATTENS AND CLIPS PRO AND START/END · TRAVERSES ET AGRAFES PRO ET START/END EN ALUMININIUM · АЛЮМИНИЕВЫЕ КОЛЕСА И КЛИПСЫ PRO И START/END

D. LAMA CERÁMICA EXADECK, PELDAÑO 120 RECTO Y TABICA CERÁMICA EXAGRES · EXADECK CERAMIC BOARDS, 120 STRAIGHT STEP TILES AND EXAGRES RISER TILES· LAME CÉRAMIQUE EXADECK, ÉTAPE 120 DROITE ET CONTREMARCHÉ CÉRAMIQUE EXAGRES · 120 ПРЯМЫХ СТУПЕНЧАТЫХ ПЛИТОК И ПЛИТОК ДЛЯ СТОЯКОВ EXAGRES

1. REINFORCED CONCRETE SLAB
2. REINFORCED CONCRETE STAIRS
3. FORMATION OF SLOPES
4. SCREED

7. LAMA CERÁMICA EXADECK · EXADECK CERAMIC BOARD · LAME CÉRAMIQUE EXADECK · КЕРАМИЧЕСКАЯ ПЛАНКА EXADECK

9. CLIP PRO · CLIP PRO · CLIP PRO · КЛИП PRO
10. CLIP INICIO/FIN · START/END CLIP · CLIP DE DÉPART/FIN · НАЧАЛО/КОНЕЦ КЛИПА
11. RASTREL ALUMINIO · ALUMINIUM BATTENS · TRAVERSE ALUMINIUM · АЛЮМИНИЕВАЯ ПОЛОСА
12. PELDAÑO EXAGRES 120 RECTO · 120 EXAGRES STRAIGHT STEP TILES · MARCHE EXAGRES 120 DROITE · СТУПЕНЬ EXAGRES 120 ПРЯМАЯ
13. TABICA CERÁMICA EXAGRES · EXAGRES RISER TILE · CONTREMARCHÉ CÉRAMIQUE EXAGRES · ПЛИТКА ДЛЯ СТОЯКОВ EXAGRES
14. ADHESIVO CEMENTOSO · CEMENT-BASED ADHESIVE · MORTIER COLLE · ЦЕМЕНТИРУЮЩИЙ КЛЕЙ

2 SOBRE UNA ESCALERA DE MADERA.
ON WOODEN STAIRS
SUR UN ESCALIER EN BOIS
ПО ДЕРЕВЯННОЙ ЛЕСТНИЦЕ

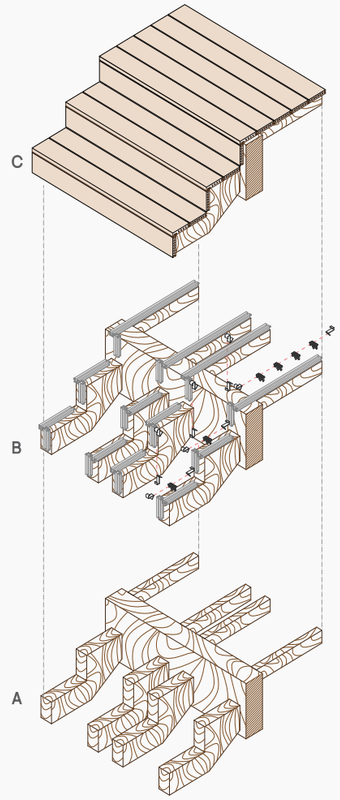

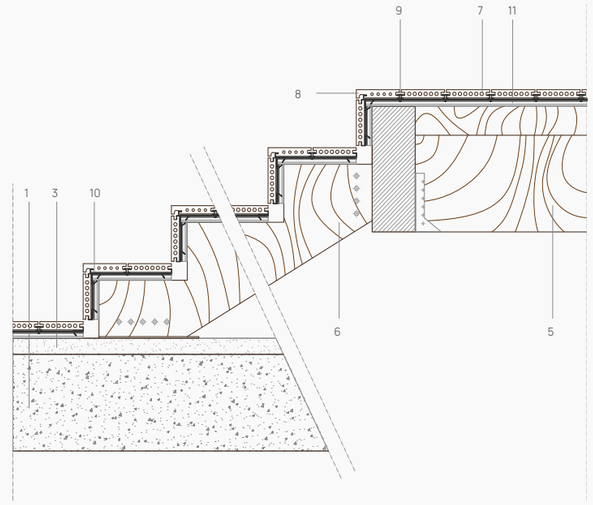

A. ESTRUCTURA Y ZANCAS DE MADERA · TIMBER STRUCTURE AND STRINGBOARDS · STRUCTURE ET LIMONS EN BOIS · ДЕРЕВЯННАЯ КОНСТРУКЦИЯ И СТРИНГЕРЫ.

B. RASTRELES DE ALUMINIO Y CLIPS PRO E INICIO/FIN · TRAVERSES ET AGRAFES PRO ET START/END EN ALUMININIUM · АЛЮМИНИЕВЫЕ КОЛЕСА И КЛИПСЫ PRO И START/END

C. LAMA CERÁMICA + LAMA DE CIERRE EXADECK · EXADECK CERAMIC BOARD + PERIMETRAL CLOSING · LAME CÉRAMIQUE EXADECK+JOINT PÉRIMÉTRIQUE · КЕРАМИЧЕСКАЯ ПЛИТА EXADECK + УПЛОТНЕНИЕ ПО ПЕРИМЕТРУ

1. SOLERA DE HORMIGÓN ARMADO · REINFORCED CONCRETE SLAB · RADIER EN BÉTON ARMÉ · . ЖЕЛЕЗОБЕТОННАЯ СТЯЖКА
3. FORMACIÓN DE PENDIENTES · FORMATION OF SLOPES · FORMATION DE PENTES · ФОРМИРОВАНИЕ СКЛОНОВ
5. ESTRUCTURA DE MADERA · WOODEN STRUCTURE · STRUCTURE EN BOIS · ДЕРЕВЯННАЯ КОНСТРУКЦИЯ
6. ZANCA DE MADERA · WOODEN STRINGER · LIMON EN BOIS · ДЕРЕВЯННЫЕ СВАИ
7. PIEZA CERÁMICA EXADECK · EXADECK CERAMIC BOARDS · PIÈCE CÉRAMIQUE EXADECK · КЕРАМИЧЕСКАЯ ПЛАНКА EXADECK
8. CIERRE PERIMETRAL EXADECK · EXADECK CERAMIC BOARDS · PIÈCE CÉRAMIQUE EXADECK · КЕРАМИЧЕСКАЯ ПЛАНКА EXADECK
9. CLIP PRO · CLIP PRO · CLIP PRO · КЛИП PRO
10. CLIP INICIO/FIN · START/END CLIP · CLIP DE DÉPART/FIN · НАЧАЛО/КОНЕЦ КЛИПА
11. RASTREL ALUMINIO · ALUMINIUM BATTENS · TRAVERSE ALUMINIUM · АЛЮМИНИЕВАЯ ПОЛОСА

CLEANING & MAINTENANCE

CLEANING UP NEWLY LAID DECKING

Thanks to their manufacturing process, EXADECK boards are easy to handle and clean following their installation. Due to worker movements across the worksite and other similar circumstances, the boards may sometimes get dirty during the installation process.

Once all the work is over, the newly laid decking should be cleaned with water and then dried with a clean cloth. In the case of persistent stains, clean the boards again with water and a neutral soap detergent, avoiding abrasive substances.

CARE

Exadeck extruded porcelain boards are manufactured to guarantee a water absorption rate of less than 0.5%. As a result, dirt will not penetrate the boards and it will remain deposited on the surface.

To clean away this surface dirt, use a pressure hose with water and then dry the surface with a clean cloth. In the case of tougher dirt, clean the boards again with water and a neutral soap detergent.

In fairly or very polluted areas, leading to a high build-up of dirt on the boards, a grease remover diluted in water can be used. Apply the solution to the surface and leave it to act for 4 to 5 minutes. Then scrub the surface with a brush. Lastly, rinse the surface with plenty of water and dry it with a cloth.

With the Exadeck removable decking system, each individual board can be removed to carry out possible maintenance work to the area beneath it.

Although only minimal care is required, the decking system should be cleaned from time to time to conserve its original appearance, hence avoiding costlier maintenance at a later date.

The substrate for the decking must be completely stable, with a slope of at least 5 mm per linear metre (0.5%) in the direction of the battens so that water can drain away. The battens should run in the same direction as the slope of the substrate on which the system is laid to guarantee optimum water drainage.

For ordinary maintenance, there are suitable products specifically for ceramics. In the event of using complementary cleaning methods using brushes or pads, do not use these types of abrasive elements of a different nature under any circumstances.

Exagres recommends the use of Fila cleaning products.

EXTRUSION PROCESS

Extrusion process is a forming technique for the manufacture of ceramic products. Basically this process consists in forcing the passage, through the application of a pressure, of the paste with a plastic consistency through a matrix.

The manufacture of tiles by the extrusion process entails four main phases: kneaded, shaping, drying and firing.

- The kneading consists in the mixing with water of the raw materials previously prepared and ground. This provides an easily extrudable paste.

- In the shaping stage, the plastic mass using vacuum pressure is kneaded and pushed through the nozzle to make tiles. This process is widely used to make special tiles pieces like steps or swimming pool border tiles, ... etc.

- Once the tiles have been shaped, hot air is used to remove the moisture content.

- Afterwards they are fired to high temperatures, to obtain a perfect vitrification.

With this process, the tiles can be recycled completely and up to 45% recycled materials are accepted in their standard process.

The raw materials selected, the careful production process with the most advanced technologies, and the work of our human team mean that the product obtained has exceptional technical characteristics.

In addition, extrusion gives the parts a homogeneous, stable and mechanically resistant internal microstructure.

With this process, three-dimensional geometries can be obtained on the pieces which are impossible to achieve with the traditional compacting process

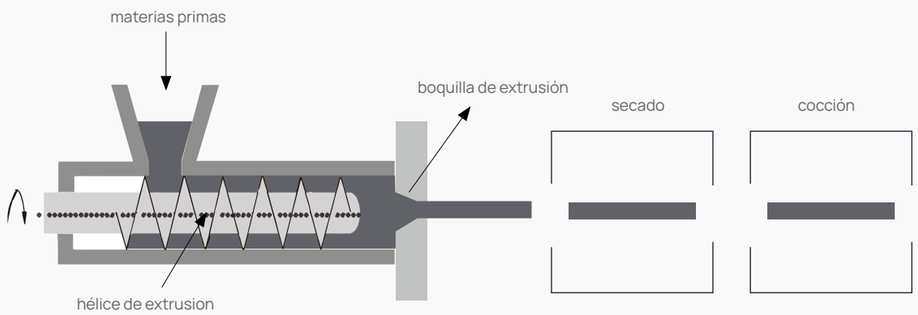

Extrusion process.

Extruded glazed porcelain stoneware, according to UNE-EN 14441, group AIa

TEST STANDARD	DESCRIPTION	STANDARDS	**EXADECK** SERIES
ISO 10545-2	Dimensions		
	Length and width	±1,0% ±2,0 mm	±0,6% ±2,0 mm
	Thickness	± 10%	±5% ±1,2 mm
	Straightness of sides	± 0,5%	±0,5% ±2 mm
	Rectangularity	± 1,0%	± 0,5 %
	Surface Flatness	± 0,5%	± 0,5%
ISO 10545-3	Water absorption	≤ 0,5 %	≤ 0,5 %
ISO 10545-4	Breaking strength	≥ 3000 N	≥ 15.000 N
ISO 10545-7	Resistance to surface abrasion	1 - 5	5
ISO 10545-9	Resistance to thermal shock	required	guaranteed
ISO 10545-11	Crazing resistance	**exigida /** required requise · обязательный	guaranteed
ISO 10545-12	Frost resistance	required	guaranteed
ISO 10545-13	Chemical resistance	minimum B	**A/LA/HA**
ISO 10545-14	Stain resistance	minimum class3	class 5
EN 16165 ANEXO A	Anti-slip resistance (barefoot ramp test)	-	class C
EN 16165 ANEXO B	Anti-slip resistance (shod ramp test)	-	**R11**
EN 16165 ANEXO C	Slip resistance (pendulum test)	required	class 3

	Size	Pieces/box	Kg/box	Boxes/pallet	Kg/pallet
	LAMA 14,1x121,7x2,6 cm	2 5,65 pcs/m²	16,64	52	866
	CIERRE PERIMETRAL 14,1x121,7x2,6 cm	-	-	-	-
	RASTREL ALUMINIO 3,5x2,5x220 cm	300 uds/pack	324	-	1,08 kg/ud
	RASTREL ALUMINIO PRO 4x4x220 cm	100 uds/pack	145	-	1445
	* CLIP PRO	100 uds/bag	1,25 kg/bag	8 bags/box	0,0125 kg/pc
	CLIP INICIO/FIN PRO 10 MM.	25 uds/box	0,2375	-	0,0095 kg/pc
	** CINTA (rollo 20m)	5 rolls/box	2,5	-	0,5 kg/pc
	*** TORNILLO 6X60 INOX + TACO	50 pcs/box	0,5 kgs/box	-	0,01 kg/pc

*** Pedido mínimo caja de 100 uds. /** Minimum order: box of 100 tiles / Commande minimum de 100 u. / Минимальный заказ: коробка, включающая 100 единиц
**** Cinta adhesiva por una cara. Goma de caucho con función de almohadilla amortiguadora. /** Adhesive tape on one side. Rubber rubber with cushioning pad function. / Bande adhésive sur un côté. Caoutchouc avec fonction de tampon amortisseur./ Клейкая лента с одной стороны. Резиновая резина с функцией амортизирующей прокладки.
***** Pedido mínimo caja de 50 uds /** Minimum order: box of 50 tiles / Commande minimum de 50 u. / Минимальный заказ: коробка, включающая 50 единиц

FIRE DECK

FIRE DECK
Unit 18 Smeaton Road Portway West Business Park
Andover Hampshire SP10 3LF
T 01264 359984

www.firedeck.uk

EXADECK reserves the right to partially or totally cancel or modify any of the colours, formats, references and technical specifications contained in this catalogue. The colours reproduced in this catalogue are intended as a guide and may vary in the original piece. The price codes, measures and references must be verified as there may be typographical errors.