CERAMIC DECKING

EXADECK

INSTALLATION GUIDE

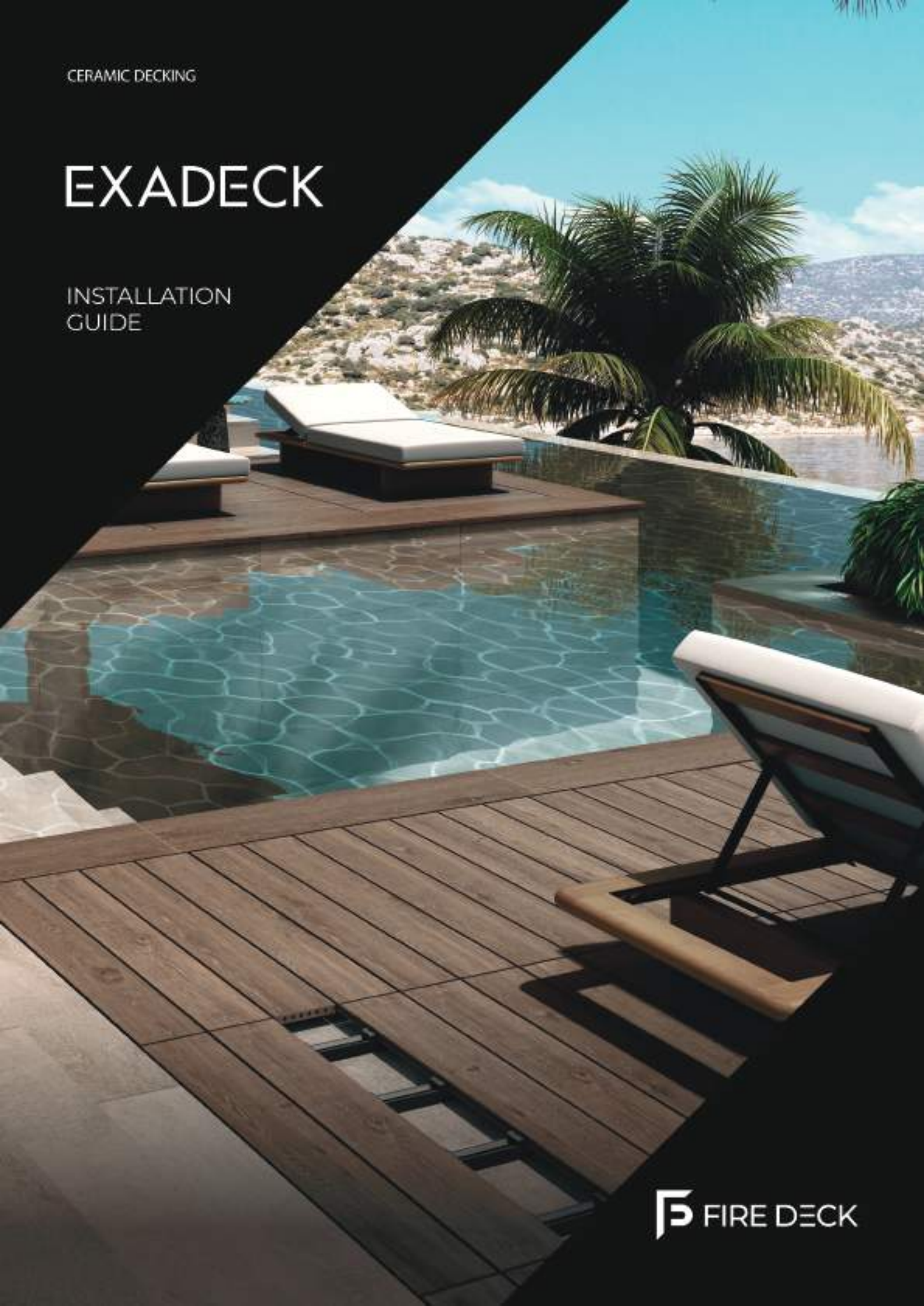

FIRE DECK

Getting Started

You must take all normal safety precautions during the installation and handling of your fire-rated Exadeck. When using power tools it is essential to follow the manufacturers' instructions regarding safety. We also recommend wearing a respirator mask, safety goggles and all other Personal Protection Equipment (PPE).

PERSONAL PROTECTION EQUIPMENT (PPE)



SAFETY GOGGLES



RESPIRATOR



SAFETY GLOVES

TOOLS



DRILL



T10 TORX BIT



CIRCULAR SAW



CHOP SAW



HAMMER



MALLET

*Always use high quality Carbide Tipped blades for metal and Diamond Blades for Exadeck boards. Do not use an angle grinder to cut boards**.**

FIXINGS



Start/End Clip



Black Aluminium W Clip (Screws Included)



Components

Exadeck Ceramic Decking

The Exadeck ceramic board has been produced and tested to the updated British building regulation standards BS 8579:2020 design of balconies and terraces. Exadeck board will never burn, rot, rust, or warp.

BOARD DIMENSIONS : 26mm (H) x 141mm (D) x 1,217mm (L)

WEIGHT	
8.32 Kgs per Board	45.76 Kgs per sqm

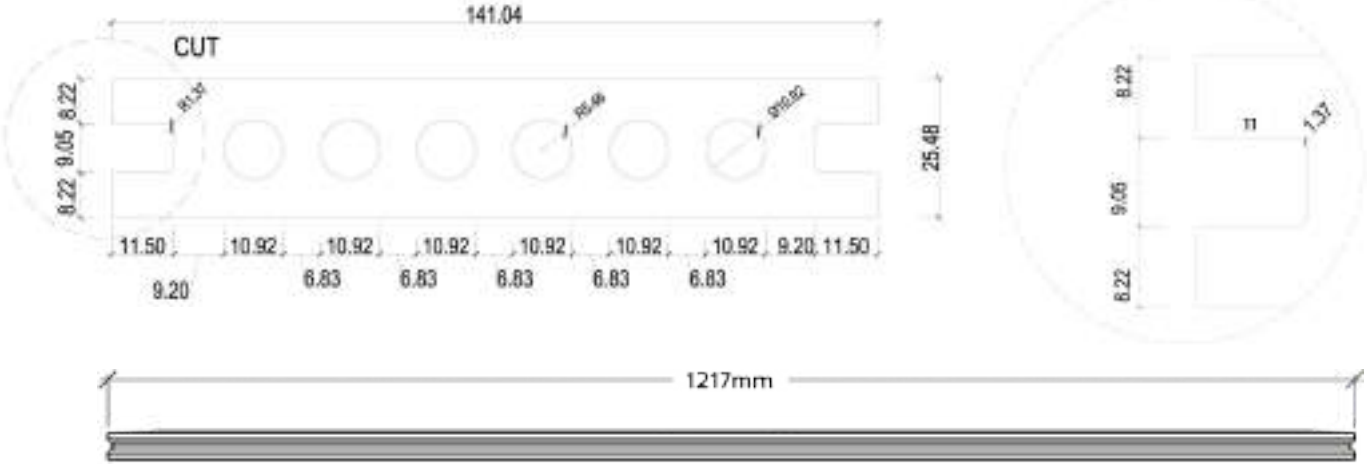

Colours



Natural



Antico



Maple



Grey



Oak



Teca

Aluminium Box & I-Plus Joists

The Box Rail comes in heights of 15mm, 20mm & 25mm with a length of 2,500mm. The I-Plus comes in heights of 50mm, 75mm & 100mm with a length of 3,600mm.

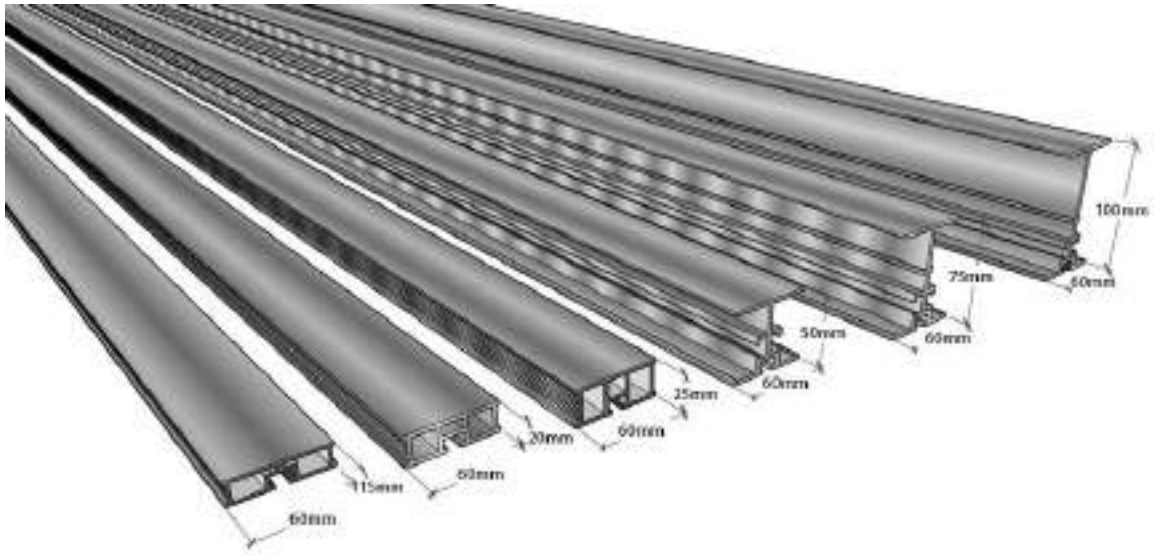

Adjustable Pedestals

The MetalPad Pedestals cover heights from 26mm to 375mm. The pedestal and aluminium joists are secured together using the supplied Wing Nut Kit.





26-35mm
SP-MET-EX-026-Z



30-40mm
SP-MET-EX-030-Z



40-50mm
SP-MET-EX-040-Z



50-70mm
SP-MET-EX-050-Z



60-90mm
SP-MET-EX-060-Z



75-115mm
SP-MET-EX-075-Z



110-185mm
SP-MET-EX-110-Z



185-260mm
SP-MET-EX-185-Z



250-325mm
SP-MET-EX-250-Z



300-375mm
SP-MET-EX-300-Z

Brackets for Box Rail Joists

The Box Rail can be secured end-to-end or at right angles using brackets and screws from our supplier Wallbarn.





Brackets for I-Plus Rail Joists

The I-Plus Joists can be secured end-to-end or at right angles. There are two options to achieve this. The first method involves using a self-tapping screw for a secure mechanical fixing. The straight and right-angle fixing brackets come with two counter-sunk holes, allowing you to easily attach them using the self-tapping screw.

The alternative fixing method utilises our Wing Nut/Bolt Kit for hand-tied fixing. To implement this method, slide the bolt head into the side or bottom profile of the I-Plus beam, then simply fit the wing nut around the bracket by hand.

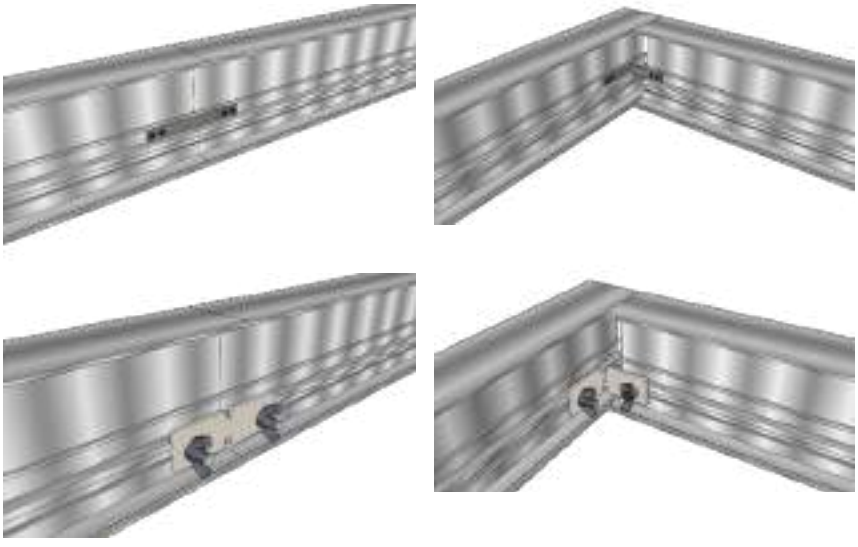

Optional Spreader Plate

The Spreader Plate is designed to significantly disperse weight and reduce point loading on vulnerable subfloors such as insulation or waterproof membranes. The pedestal slides into the Spreader plate without the need for mechanical fixing.





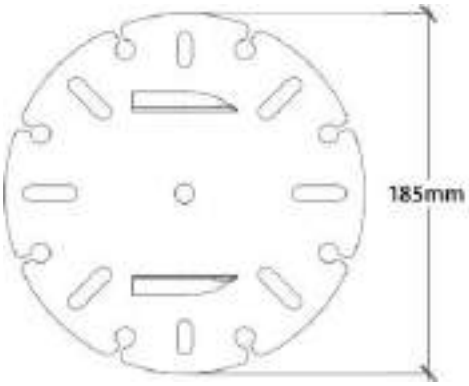

Start/Finish Clip

The Start Finish Clip is made from Stainless Steel and used to start your first and last board.





W Clip Hidden Fixing

The W Clip is used to secure the boards to the aluminium joists. It is 60mm wide and covers the 60mm wide aluminium joists so no shine from the joists can be seen through the gaps between the boards.





Pedestal Placement

The placement of pedestals is determined by the maximum joist centres of 400mm. The placement of pedestals along the joist depends on the subfloor the system will be placed on and the height of the aluminium joist you are using.

When laying on concrete or non-vulnerable subfloors, refer to the recommended diagrams below to match the chosen joist. For vulnerable subfloors like roofing membranes or insulation, check with the manufacturers of these products for their compressive strength.

We highly recommend using the optional Spreader Plate when laying pedestals on roofing membranes or insulation.

15mm Box Rail/Joist (2.5m Length)

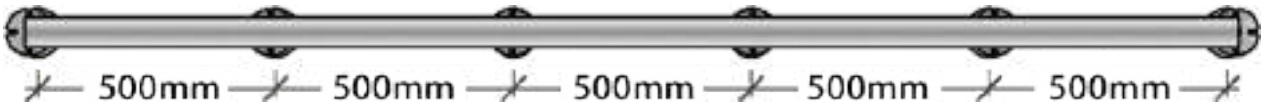

20mm Box Rail/Joist (2.5m Length)



25mm Box Rail/Joist (2.5m Length)



50mm Box Rail/Joist (3.6m Length)

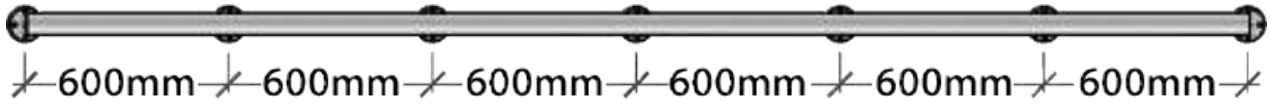

75mm Box Rail/Joist (3.6m Length)

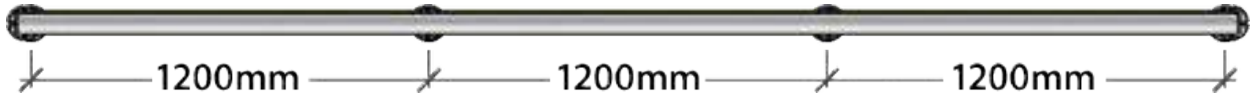

100mm Box Rail/Joist (3.6m Length)



Joists Centres

Joists laid at 405mm max centres

You will require 5mm per metre fall on the subframe. A maximum span of 405.67mm is required between the first and second support joists, this also applies to the second to last and last joists.

- A maximum of 405.67mm centres is recommended for all other support beams.
- A maximum overhang of 150mm is permitted for the ends of the deck.

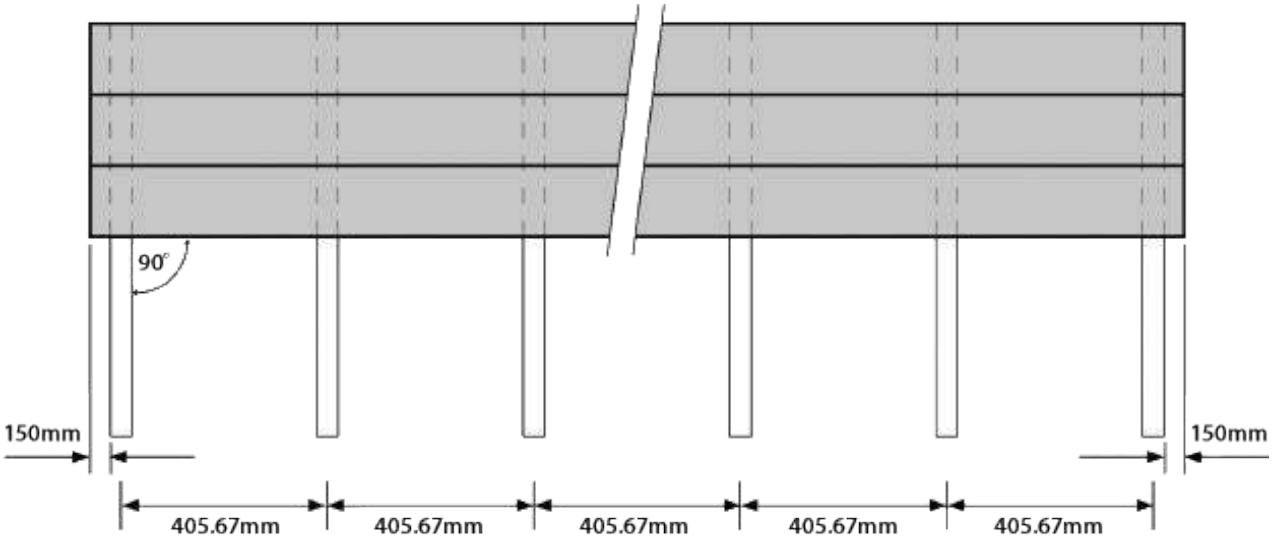

Installing Start/ Finish Clips

Once the substructure is in place, you can begin installing the Exadeck fire-rated decking boards. Start by laying a row of Start/Finish Clips along the first run of the subframe. These clips will secure the first row of boards.
The Start/Finish Clips should be spaced no more than 405.67mm apart from the first support batten on the subframe. Once installed, the clips will provide a secure starting point for your decking and hold the first row of boards in place.

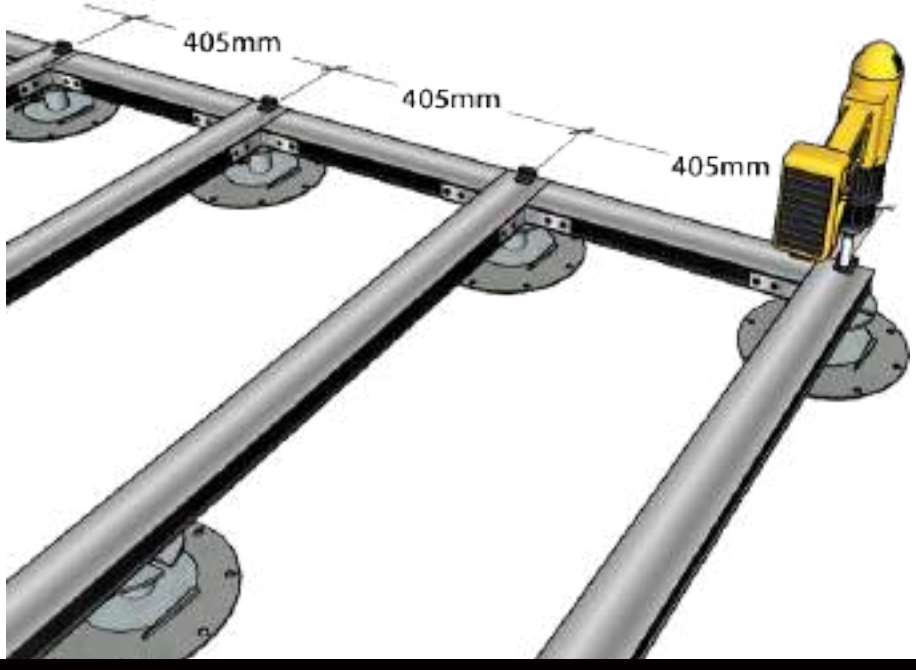

Laying First Board

Once your Start/Finish Clips are in place it is time to lay your first row of Exadeck boards. To do this simply slide the board into the clips as shown below. If there is any resistance at all give the boards a gentle tap with a rubber mallet; repeat this until all boards are in the desired position and fit flush inside the Start/ Finish Clips.



Please Note: A maximum overhang of 150mm is allowed at the end of the boards, and all boards should span a minimum of three support joists on the subframe. Failure to follow these guidelines could result in a faulty deck.

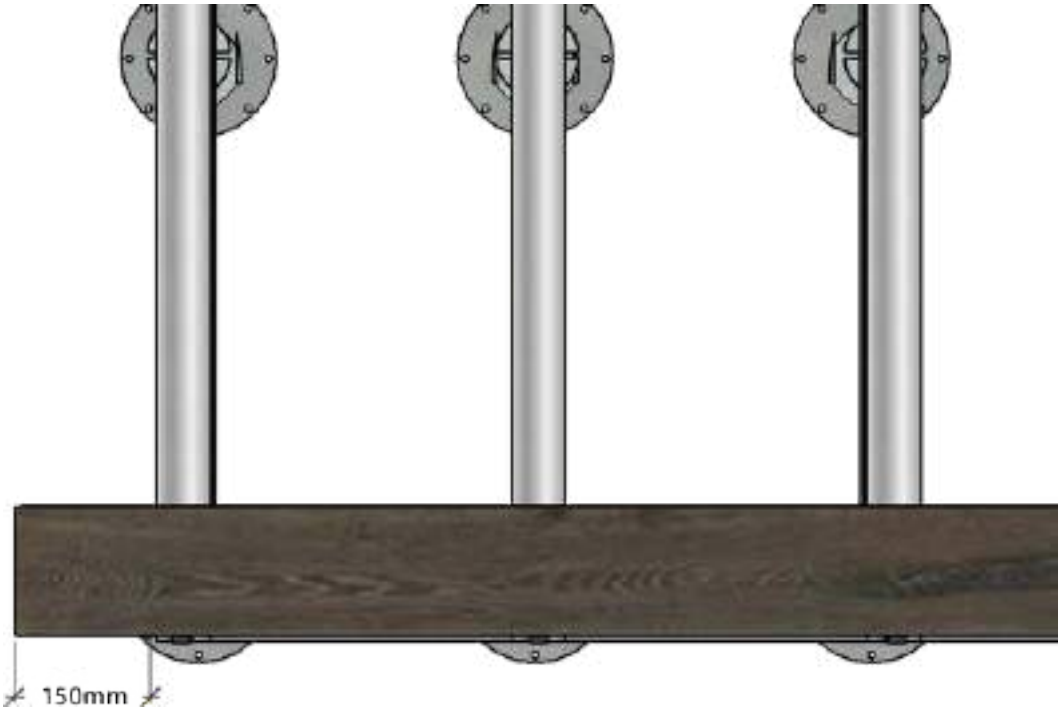

Secure First Board

When the first row of boards are in position you will need to place a W Clip into the groove of the boards and secure with the two screws supplied, taking care not to tighten the screws too much. Ensure the correct position before fully tightening the screws. Repeat this process for all other deck boards.





Continue Laying Your Boards

Continue to lay your boards and secure each one with the W Clip until area is covered.



Laying the Last Board

Simply fit the W Clip as per the previous boards to secure the last board.



FIRE DECK

FIRE DECK
Unit 18 Smeaton Road Portway West Business Park
Andover Hampshire SP10 3LF
T 01264 311 113

www.firedeck.uk

EXADECK reserves the right to partially or totally cancel or modify any of the colours, formats, references and technical specifications contained in this catalogue. The colours reproduced in this catalogue are intended as a guide and may vary in the original piece. The price codes, measures and references must be verified as there may be typographical errors.